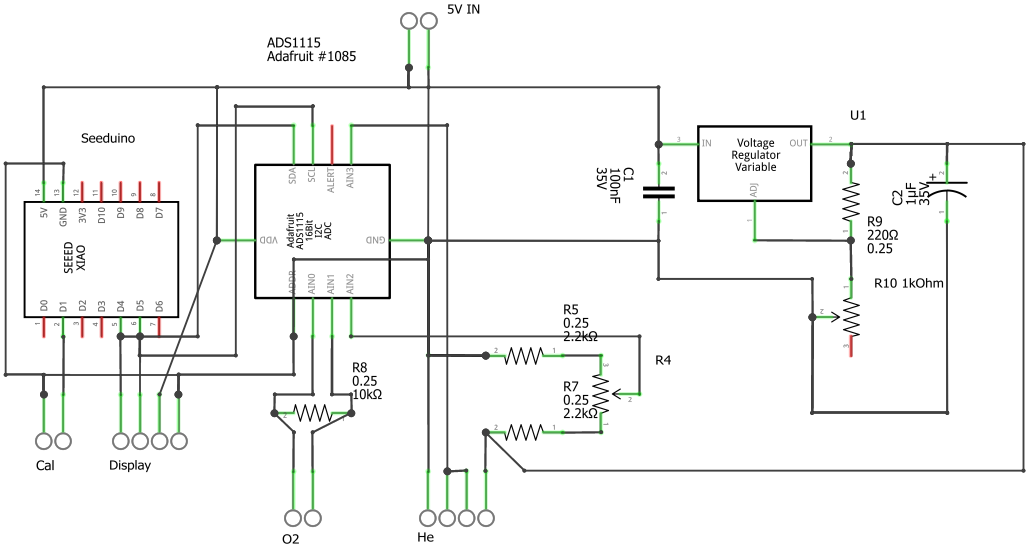
5V IN
ADS1115
Adafruit #1085
Seeduino
SEEED
XIAO
5V
GND
3V3
D10
D9
D8
D7
D0
D1
D2
D3
D4
D5
D6
Adafruit
ADS1115
16-Bit
I2C
ADC
VDD
GND
ADDR
SDA
SCL
ALERT
AIN3
AIN0
AIN1
AIN2
C1
100nF
35V
Voltage
Regulator
Variable
IN
OUT
ADJ
U1
C2
1uF
35V
R9
220Ω
0.25
R10 1kOhm
R5
0.25
2.2kΩ
R4
R7
0.25
2.2kΩ
R8
0.25
10kΩ
Cal
Display
O2
He
fritzing